18 24

HS FRENCH FLINT

THE GLASS CONTAINER SPECIALISTS

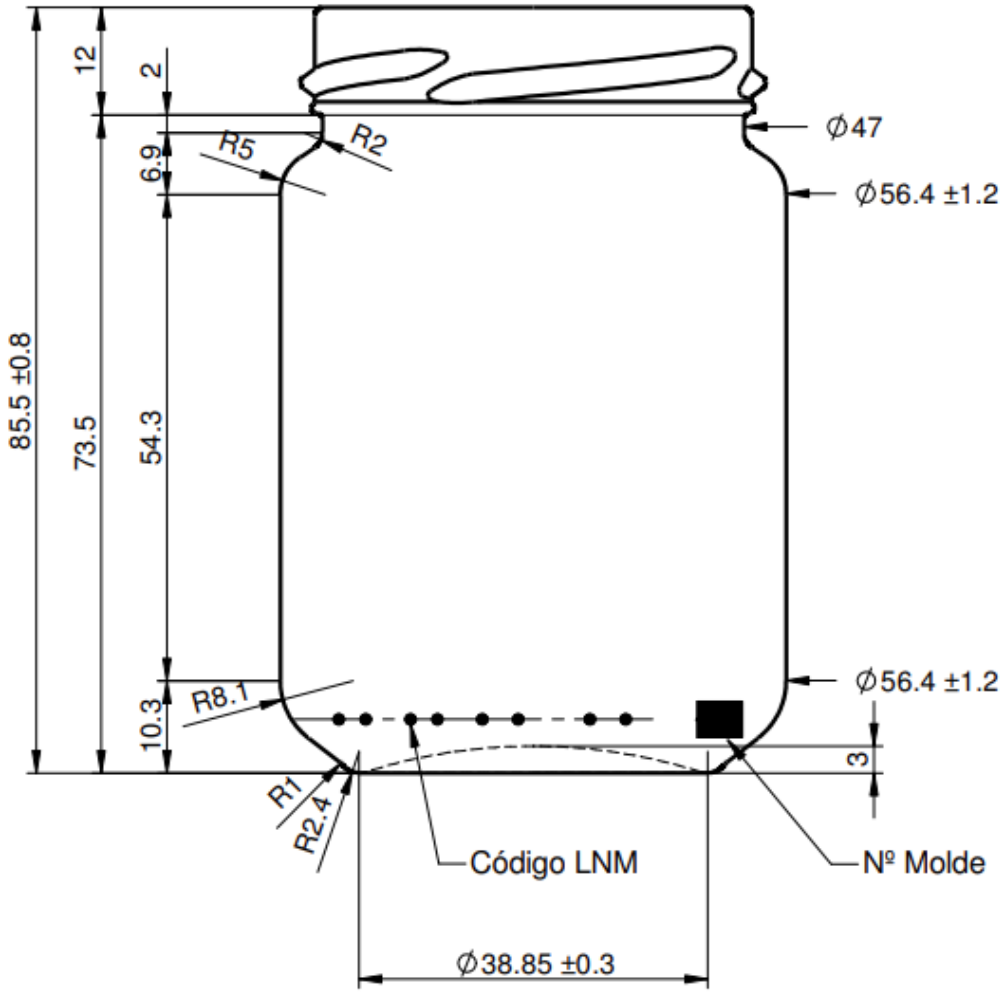

Product code	6201B03542	Weight (approx.)	100g
Finish	8oz HONEY JAR 53T/O	Brim-full capacity	156±7ml
Capacity	156ml		